Technical data sheet

Clamp clip, single, A2 plastic pressure trough

Item number: 1178504

Suitable for all C profile rails with slot width 18 mm and 22 mm.

Polypropylene pressure trough, halogen-free, colour light grey RAL 7035.

HALOGEN FREE | CE | U | 18 | 22

A2 Stainless steel

2B Bright, treated

Master data

Item number	1178504
Type	2056U 12 A2
Description 1	Clamp clip
Manufacturer	OBO
Dimension	8-12mm
Material	Stainless steel 1.4301
Surface Surface standard	Bright, treated
Smallest sales unit	50
Unit of quantity	Piece
Weight	3 kg
Weight unit	kg/100 pc.
CO2 Footprint (GWP) Cradle-to-Gate	0,1706 kg COe / 1 Piece

Technical data sheet

Clamp clip, single, A2 plastic pressure trough

Item number: 1178504

Dimensions

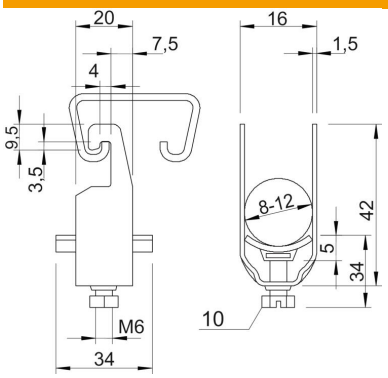

Dimension A	20 mm
Dimension B	16 mm
Dimension C	34 mm
Dimension G (mm)	M6
Dimension H	42 mm
Dimension L	34 mm
Dimension t	1.5 mm
Dimension x	5 mm

Technical data

Number of cables/pipes	1
for 1 cable H	42 mm
for 1 cable L	34
for rail with slot width (with interval), max.	22 mm
for rail with slot width (with interval), min.	18 mm
Halogen-free	yes
Max. Tightening torque	3 Nm
With plastic trough	yes
With metal trough	no
Mounting type	Profile rail
ROHS-conformant	yes
Impact-resistant	no
Clamping range D, max.	12 mm
Clamping range D, min.	8 mm
Surface addition	Untreated
Material addition	Rustproof steel
With counter-trough	no
Material of trough	Plastic
Material quality of trough	Polypropylene