Technical data sheet

Clamp clip, single, A2 plastic pressure trough

Item number: 1178539

Suitable for all C profile rails with slot width 18 mm and 22 mm.

Polypropylene pressure trough, halogen-free, colour light grey RAL 7035.

HALOGEN FREE | CE | U | 18 | 22

A2 Stainless steel

2B Bright, treated

Master data

Item number	1178539
Type	2056U 28 A2
Description 1	Clamp clip
Manufacturer	OBO
Dimension	22-28mm
Material	Stainless steel 1.4301
Surface	Bright, treated
Surface standard	
Smallest sales unit	50
Unit of quantity	Piece
Weight	5.35 kg
Weight unit	kg/100 pc.
CO2 Footprint (GWP) Cradle-to-Gate	0,3206 kg COe / 1 Piece

Technical data sheet

Clamp clip, single, A2 plastic pressure trough

Item number: 1178539

Dimensions

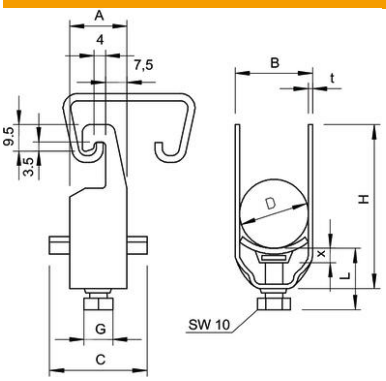

Dimension A	20 mm
Dimension B	33 mm
Dimension C	34 mm
Dimension G (mm)	M6
Dimension H	59 mm
Dimension L	34 mm
Dimension t	2 mm
Dimension x	5 mm

Technical data

Number of cables/pipes	1
for 1 cable H	59 mm
for 1 cable L	34
For pipe diameter, max.	25 mm
For pipe diameter, min.	25 mm
for rail with slot width (with interval), max.	22 mm
for rail with slot width (with interval), min.	18 mm
Halogen-free	yes
Max. Tightening torque	3 Nm
With plastic trough	yes
With metal trough	no
Mounting type	Profile rail
ROHS-conformant	yes
Impact-resistant	no
Clamping range D, max.	28 mm
Clamping range D, min.	22 mm
Surface addition	Untreated
Material addition	Rustproof steel
With counter-trough	no
Material of trough	Plastic
Material quality of trough	Polypropylene