Technical data sheet

Clamp clip, single, ALU plastic pressure trough

Item number: 1184504

Suitable for all C profile rails with slot width 18 mm and 22 mm.

Polypropylene pressure trough, halogen-free, colour light grey RAL 7035.
The clamp clips 2056/U ALU for one cable according to VDE 0298-1 is suitable for individual routing of single-wire cables in rotary current networks, as there is no closed galvanic circuit. However, the lower mechanical resistance of the aluminium clips must be taken into account for short circuits, i.e. keep the distance between the clips as short as possible in a longitudinal direction and ensure sufficient side spacing between the cables.

HALOGEN FREE U 18 22

Alu Aluminium

Master data

Item number	1184504
Type	2056U 64 ALU
Description 1	Clamp clip
Manufacturer	OBO
Dimension	58-64mm
Material	Aluminium
Smallest sales unit	50
Unit of quantity	Piece
Weight	5.25 kg
Weight unit	kg/100 pc.
CO2 Footprint (GWP) Cradle-to-Gate	0,6035 kg COe / 1 Piece

Technical data sheet

Clamp clip, single, ALU plastic pressure trough

Item number: 1184504

Dimensions

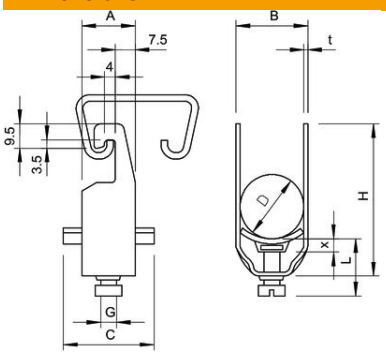

Dimension A	23 mm
Dimension B	70 mm
Dimension C	40 mm
Dimension G (mm)	M8
Dimension H	103 mm
Dimension L	38.5 mm
Dimension t	2.5 mm
Dimension x	6.5 mm

Technical data

Number of cables/pipes	1
for 1 cable H	97 mm
for 1 cable L	38.5
For pipe diameter, max.	63 mm
For pipe diameter, min.	63 mm
for rail with slot width (with interval), max.	22 mm
for rail with slot width (with interval), min.	18 mm
Halogen-free	yes
Max. Tightening torque	2 Nm
With plastic trough	yes
With metal trough	no
Mounting type	Profile rail
ROHS-conformant	yes
Impact-resistant	no
Clamping range D, max.	64 mm
Clamping range D, min.	58 mm
Surface addition	Untreated
Material addition	Aluminium
With counter-trough	no
Material of trough	Plastic
Material quality of trough	Polypropylene