Technical data sheet

Clamp clip, single, plastic pressure trough, ALU

Item number: 1183222

Suitable for all C profile rails with 16–17 mm slot width; aluminium ALMg 3 clamp and bolt, polypropylene pressure sleeve, halogen-free, colour light grey RAL 7035.
The clamp clips 2056/ALU, in the version for one cable according to VDE 0298-1, are suitable for individual routing of single-wire cables in rotary current networks, as there is no closed circuit. However, the lower mechanical resistance of the aluminium clips must be taken into account for short circuits, i.e. keep the distance between the clips as short as possible in a longitudinal direction and ensure sufficient side spacing between the cables.
(Metal pressure troughs on request.)

HALOGEN FREE · CE · UKCA · H · 16-17

Alu Aluminium

Master data

Item number	1183222
Type	2056 22 ALU
Description 1	Clamp clip
Manufacturer	OBO
Dimension	16-22mm
Material	Aluminium
Smallest sales unit	100
Unit of quantity	Piece
Weight	1.05 kg
Weight unit	kg/100 pc.
CO2 Footprint (GWP) Cradle-to-Gate	0,199 kg COe / 1 Piece

Technical data sheet

Clamp clip, single, plastic pressure trough, ALU

Item number: 1183222

Dimensions

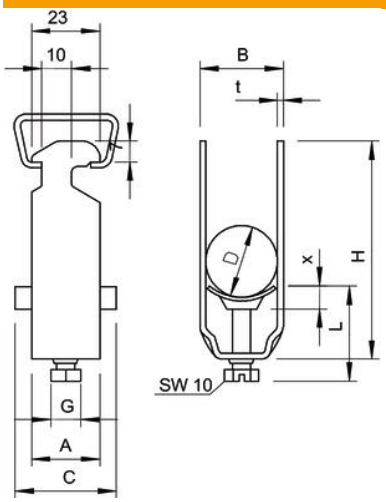

Dimension A	23 mm
Dimension B	27 mm
Dimension C	34 mm
Dimension G (mm)	M6
Dimension H	50 mm
Dimension L	34 mm
Dimension t	1.5 mm
Dimension x	5 mm

Technical data

Number of cables/pipes	1
for rail with slot width (with interval), max.	17 mm
for rail with slot width (with interval), min.	16 mm
Halogen-free	yes
Max. Tightening torque	2 Nm
With plastic trough	yes
With metal trough	no
Mounting type	Profile rail
ROHS-conformant	yes
Impact-resistant	no
Clamping range D, max.	22 mm
Clamping range D, min.	16 mm
Surface addition	Untreated
Material addition	Aluminium
With counter-trough	no
Material of trough	Plastic
Material quality of trough	Polypropylene