Technical data sheet

AML3518 anchor rail, slot 16.5 mm, FS, perforated

Item number: 1119646

Central C profile rail for cable routing, in conjunction with clamp clips with a hammerhead foot. Can also be used as suspension construction for cable support systems.

16,5 H E30 E90

St Steel

FS Strip galvanised

Master data

Item number	1119646
Type	AML3518P1000FS
Description 1	Profile rail
Description 2	perforated, slot 16.5mm
Manufacturer	OBO
Dimension	1000x35x18
Material	Steel
Surface	Strip galvanised
Surface standard	DIN EN 10346
Smallest sales unit	1
Unit of quantity	Metre
Weight	82 kg
Weight unit	kg/100 m
CO2 Footprint (GWP) Cradle-to-Gate	2,002 kg CO2e / 1 Meter

Technical data sheet

AML3518 anchor rail, slot 16.5 mm, FS, perforated

Item number: 1119646

Dimensions

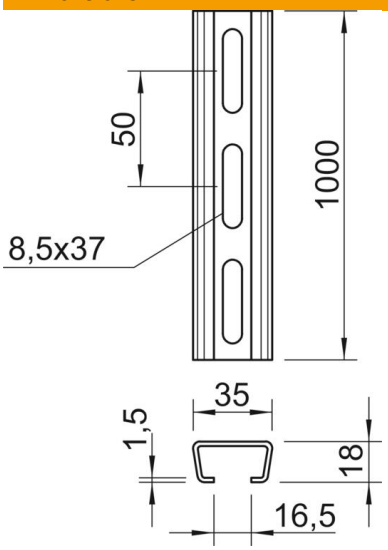

Length	1,000 mm
Width	35 mm
Height	18 mm
Dimension L	1,000 mm

Technical data

Breakable	no
Type of perforation	Perforated back
Version for	Single profile
Drill hole spacing, centre	50 mm
Maintain electrical functions	yes
Material thickness	1.5 mm
With perforation	yes
With toothing	no
Profile shape	C profile
ROHS-conformant	yes
Slot width	16.5 mm
Static value A	1.01 cm^2
Static value Iy	0.44 cm^4
Static value Iz	1.84 cm^4
Static value Wy	0.42 cm^3
Static value Wz	1.05 cm^3