Technical data sheet

External corner hood, for device installation trunking Rapid 45-2 type GK-53100
Item number: 6113054

External corner for changing the direction of Rapid 45-2 device installation trunking. The fittings can be adjusted between 80–110°.

PC/ABS Polycarbonate/Acrylnitrile-butadiene-styrene

Master data

Item number	6113054
Type	GK-AH53100AL
Description 1	External corner
Description 2	variable
Manufacturer	OBO
Dimension	110x88x88
Colour	aluminium
Material	Polycarbonate/Acrylnitrile-butadiene-styrene
Smallest sales unit	1
Unit of quantity	Piece
Weight	6.9 kg
Weight unit	kg/100 pc.
CO2 Footprint (GWP) Cradle-to-Gate	0,3878 kg CO2e / 1 Piece

Technical data sheet

External corner hood, for device installation trunking Rapid 45-2 type GK-53100
Item number: 6113054

Dimensions

Length	88 mm
Width	110 mm
Height	55 mm

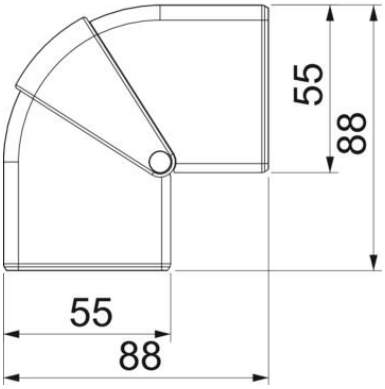

Technical data sheet

External corner hood, for device installation trunking Rapid 45-2 type GK-53100
Item number: 6113054

Technical data

Number of covers	1
Version for	Hood fitting
for duct width	100 mm
for trunking height	53 mm
Halogen-free	yes
Cable retaining clip	no
Duct connector	no
Cover mounting type	Cross-over
Mounting perforation in base	no
Cover width	0 mm
Cover width 2	0 mm
Cover width 3	0 mm
ROHS-conformant	yes
Protection rating	IP40
Protective film	no
Protection rating IK code	IK08
Symmetrical	yes
Permitted temperature range, max.	60 °C
Permitted temperature range, min.	-15 °C
Angle range, max.	110 mm
Angle range, min.	80 mm