Technical data sheet

Flat angle, asymmetrical, falling, for device installation trunking Rapid 80 type GS-A70210
Item number: 6278030

Flat angle, falling, for changing the direction of the GS device installation trunking.

St Steel

Master data

Item number	6278030
Type	GS-AFF70210RW
Description 1	Flat angle
Description 2	falling asymmetrical
Manufacturer	OBO
Dimension	70x210x300
Colour	Pure white; RAL 9010
Material	Steel
Smallest sales unit	1
Unit of quantity	Piece
Weight	162 kg
Weight unit	kg/100 pc.
CO2 Footprint (GWP) Cradle-to-Gate	8,2015 kg CO2e / 1 Piece

Technical data sheet

Flat angle, asymmetrical, falling, for device installation trunking Rapid 80 type GS-A70210
Item number: 6278030

Dimensions

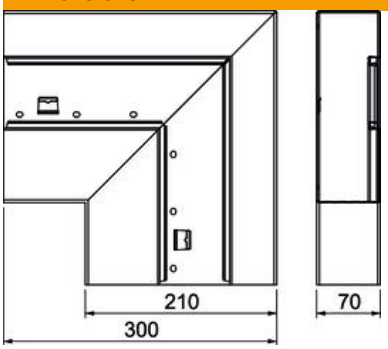

Length	300 mm
Width	210 mm
Height	70 mm

Technical data

Number of covers	1
Version for	Base
for duct width	210 mm
for trunking height	70 mm
Halogen-free	yes
Cable retaining clip	no
Duct connector	no
Cover mounting type	Internal
Mounting perforation in base	yes
Cover width	76.5 mm
Change of direction	Vertical, falling
Protection rating	IP30
Protective film	yes
Protection rating IK code	IK10
Symmetrical	no
Permitted temperature range, max.	60 °C
Permitted temperature range, min.	-25 °C
Angle range, min.	90 mm