Technical data sheet

MS4141 mounting rail, slot 22 mm, A4, perforated

Item number: 1123051

Heavy-duty C profile rail for individual installation of support constructions, e.g. for cable trays or as a panel for switchgear cabinets. Can also be used for cable routing, in conjunction with clamp clips with a U foot.

A4 Stainless steel

2B Bright, treated

Master data

Item number	1123051
Type	MS4141P6000A4
Description 1	Profile rail
Description 2	perforated, slot 22mm
Manufacturer	OBO
Dimension	6000x41x41
Material	Stainless steel 1.4571
Surface Surface standard	Bright, treated
Smallest sales unit	6
Unit of quantity	Metre
Weight	247.5 kg
Weight unit	kg/100 m
CO2 Footprint (GWP) Cradle-to-Gate	12,578 kg CO2e / 1 Meter

Technical data sheet

MS4141 mounting rail, slot 22 mm, A4, perforated

Item number: 1123051

Dimensions

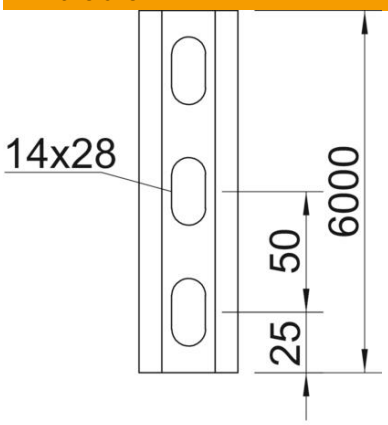

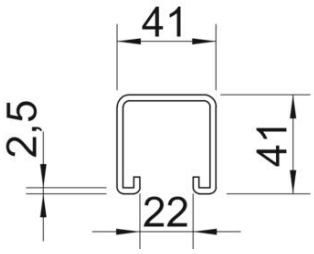

Length	6,000 mm
Width	41 mm
Height	41 mm
Dimension L	6,000 mm

Technical data

Breakable	no
Type of perforation	Perforated back
Version for	Single profile
Drill hole spacing, centre	50 mm
Maintain electrical functions	no
Hole size	14x28
Material thickness	2.5 mm
With toothing	yes
Profile shape	C profile
ROHS-conformant	yes
Slot width	22 mm
Static value A	2.97 cm^2
Static value Iy	6.05 cm^4
Static value Iz	9.01 cm^4
Static value Wy	2.91 cm^3
Static value Wz	4.4 cm^3