# Technical data sheet

## MSL4141 mounting rail, slot 22 mm, FS, perforated

## Item number: 1122970

Heavy-duty C profile rail for individual installation of support constructions, e.g. for cable trays or as a panel for switchgear cabinets. Can also be used for cable routing, in conjunction with clamp clips with a U foot.

U 22 E30 E90

St Steel

FS Strip galvanised

### Master data

| | |
|---|---|
| Item number | 1122970 |
| Type | MSL4141P1000FS |
| Description 1 | Profile rail |
| Description 2 | perforated, slot 22mm |
| Manufacturer | OBO |
| Dimension | 1000x41x41 |
| Material | Steel |
| Surface | Strip galvanised |
| Surface standard | DIN EN 10346 |
| Smallest sales unit | 1 |
| Unit of quantity | Metre |
| Weight | 201.1 kg |
| Weight unit | kg/100 m |
| CO2 Footprint (GWP) Cradle-to-Gate | 4,8107 kg CO2e / 1 Meter |

# Technical data sheet

## MSL4141 mounting rail, slot 22 mm, FS, perforated

## Item number: 1122970

### Dimensions

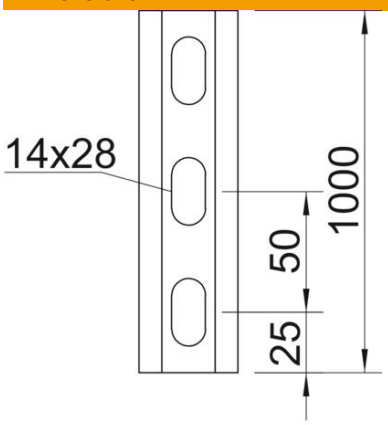


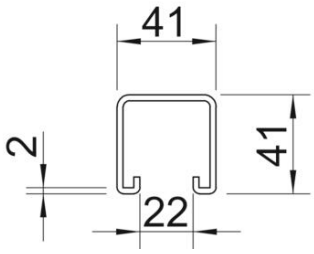


| | |
|---|---|
| Length | 1,000 mm |
| Width | 41 mm |
| Height | 41 mm |
| Dimension L | 1,000 mm |

### Technical data

| | |
|---|---|
| Breakable | no |
| Type of perforation | Perforated back |
| Version for | Single profile |
| Drill hole spacing, centre | 50 mm |
| Maintain electrical functions | yes |
| Hole size | 14x28 |
| Material thickness | 2 mm |
| With perforation | yes |
| With toothing | yes |
| Profile shape | C profile |
| ROHS-conformant | yes |
| Slot width | 22 mm |
| Static value A | 2.45 $cm^2$ |
| Static value Iy | 5.18 $cm^4$ |
| Static value Iz | 7.56 $cm^4$ |
| Static value Wy | 2.51 $cm^3$ |
| Static value Wz | 2.69 $cm^3$ |