Technical data sheet

Height-adjustable cassette for tube body, RKFNUZD3, stainless steel
Item number: 7409380

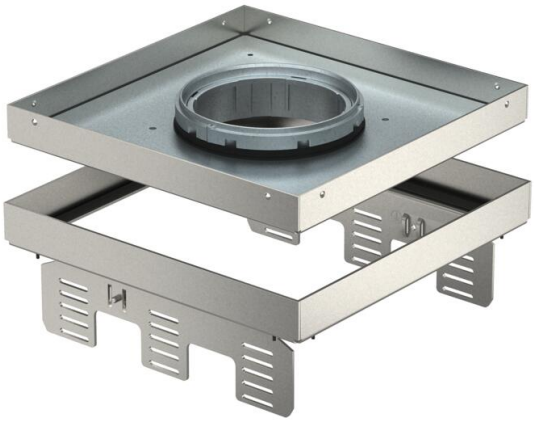

Height-adjustable cassette, decoupled from the floor, of nominal size 9, for tube bodies, for the installation of accessories in dry or wet-cleaned floors for indoor use, for mounting in underfloor boxes UZD250 or UZD350, either in conjunction with a mounting lid DUG../9 or in UGD250-3/9 or UGD350-3/9. Mounting takes place using height adjustment brackets (order separately) in the aluminium frame profile of the underfloor boxes.
Height-adjustable cassette for tube body, 3-compartment. 3 APMT5 cover plates can be installed. For the installation of three UT4 universal supports for nine single accessories with support ring/support clamp or 12 Modul 45 devices. The tube body is not contained in the scope of delivery.

A2 Stainless steel

Master data

Item number	7409380
Type	RKFN2UZD3 9VS25
Description 1	Square cassette
Description 2	for tube
Manufacturer	OBO
Dimension	243x243mm
Material	Stainless steel 1.4301
Smallest sales unit	1
Unit of quantity	Piece
Weight	346 kg
Weight unit	kg/100 pc.
CO2 Footprint (GWP) Cradle-to-Gate	21,9836 kg CO2e / 1 Piece

Technical data sheet

Height-adjustable cassette for tube body, RKFNUZD3, stainless steel
Item number: 7409380

Dimensions

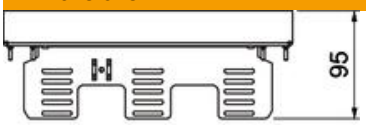

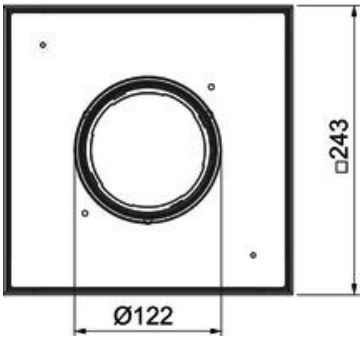

Length	243 mm
Width	243 mm
Height	95 mm
Dimension h	95 mm

Technical data

Number of installable devices	12
Number of cable outlets	1
Cover version	Square
Cable outlet version	Lowerable tube body
Floor care	Wet
Decouplable	yes
Floor height, min.	110 mm
Suitable for raised floor installation	yes
Suitable for cavity floor installation	yes
Suitable for underfloor box	250/350
Device support to accept mounting boxes	no
Length of installation dimensions	244 mm
Nominal size for device installation units	9
ROHS-conformant	yes
Protection rating (IP) when used	IP20
Protection rating (IP) when unused	IP44
Protection rating IK code	IK10
Heavy-duty version	no
Installation system type	UT4
Vertical load, large area	to 3,000 N
Vertical load, small area	to 3,000 N
Approvals	VDE
Floor covering thickness	25 mm